6

Heuristic Search

Chapter Learning Outcomes

CLO

6

- Know and understand the meaning of heuristic search.
- List some heuristic search algorithms.
- Implementing heuristic function for tic-tac-toe
- Implementing heuristic function for 8-puzzle
- Understand, apply and evaluate (GBFS, A*, and Hill Climbing) algorithms

د. حسن المعيدي

Heuristic Search

- Sometimes called **informed** search.

- Uses domain-specific knowledge to make a good guess about how to find a *good* (**maybe not best**) answer

د. حسن المعيدي

Examples of Heuristic Search Algorithms

- ✓ Greedy Best-First-Search (GBFS)
- ✓ A*
- IDA*
- SMA*
- ✓ Hill Climbing
- Beam search

د. حسن المعيدي

Tic-Tac-Toe as (a Search Problem)

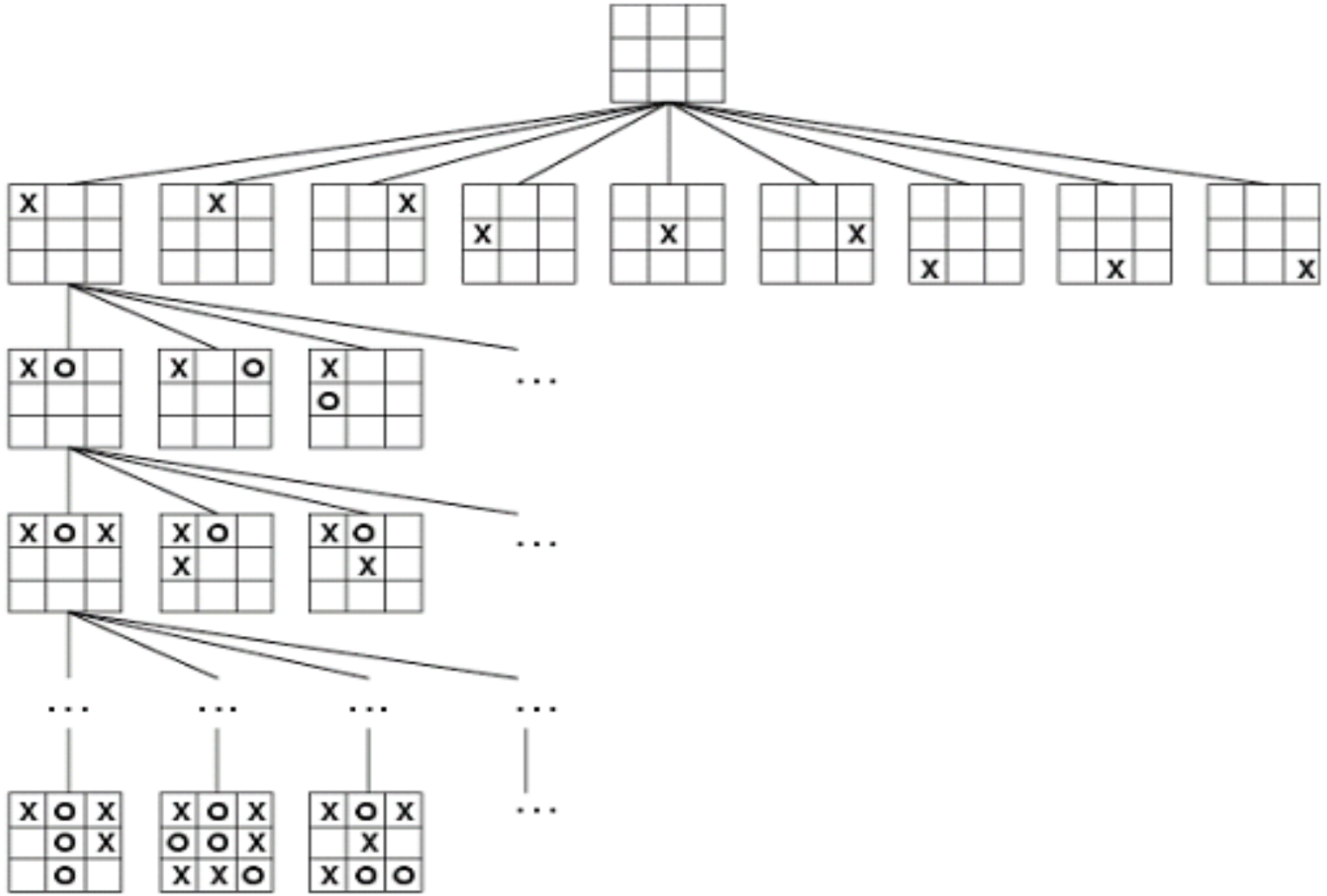

Tic-Tac-Toe as (a Search Problem)

First three levels of the tic-tac-toe state space reduced by symmetry.

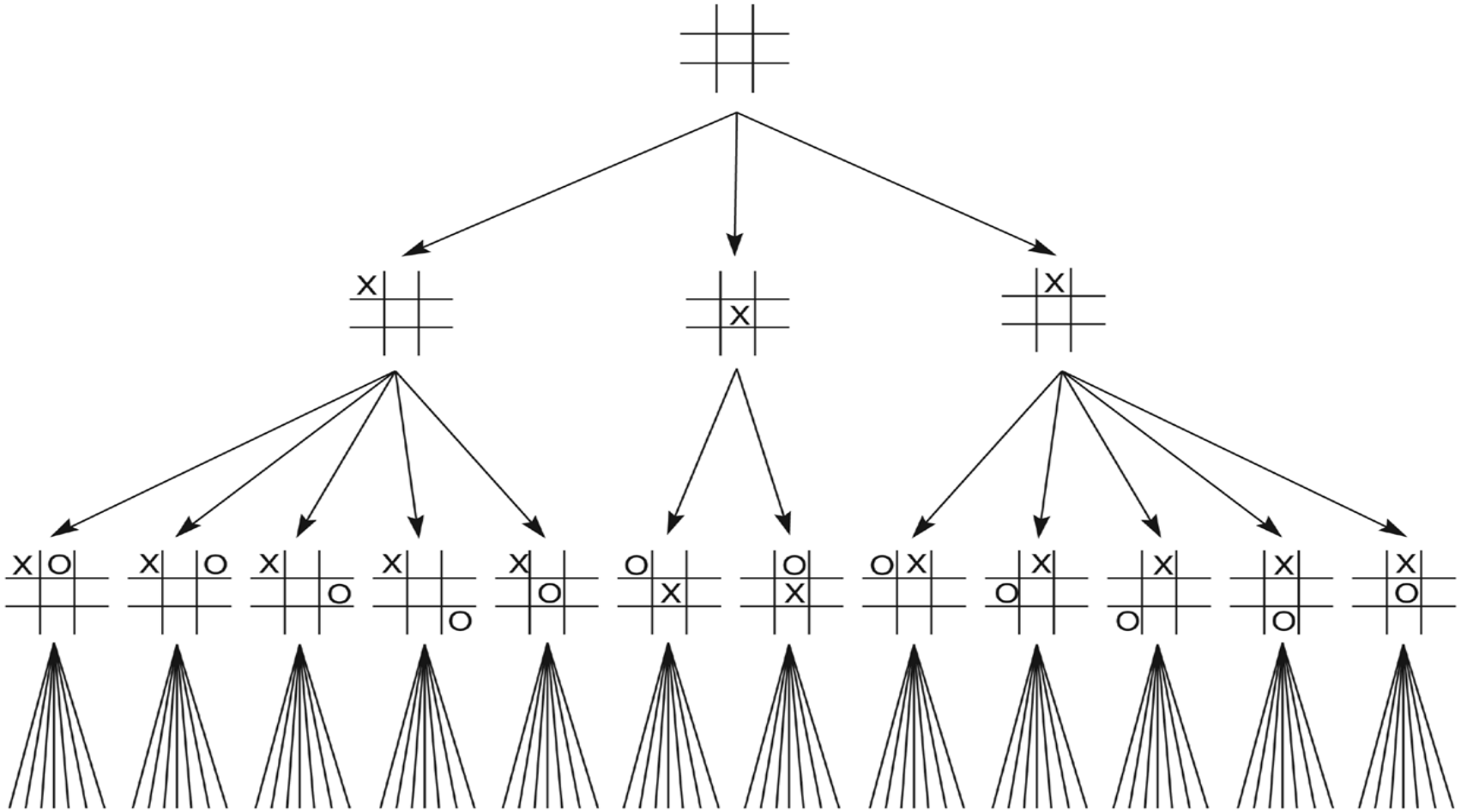

Implementing Heuristic Function for Tic-Tac-Toe

EXAMPLE

Which of the following is the best choice for you?

A

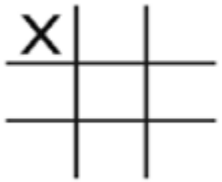

B

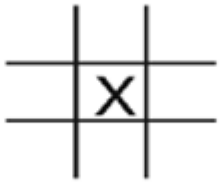

C

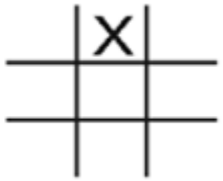

Implementing Heuristic Function for Tic-Tac-Toe

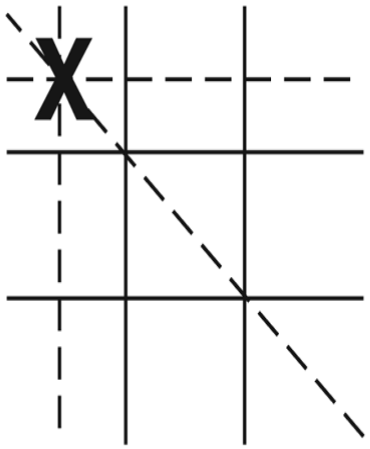

Three wins through
a corner square

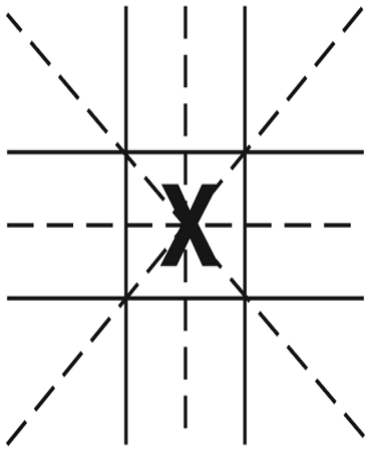

Four wins through
the center square

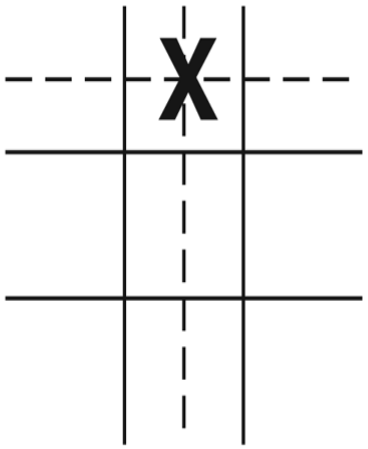

Two wins through
a side square

h(n) = number of ways to win.

Implementing Heuristic Function for Tic-Tac-Toe

h(n) = number of ways to win.

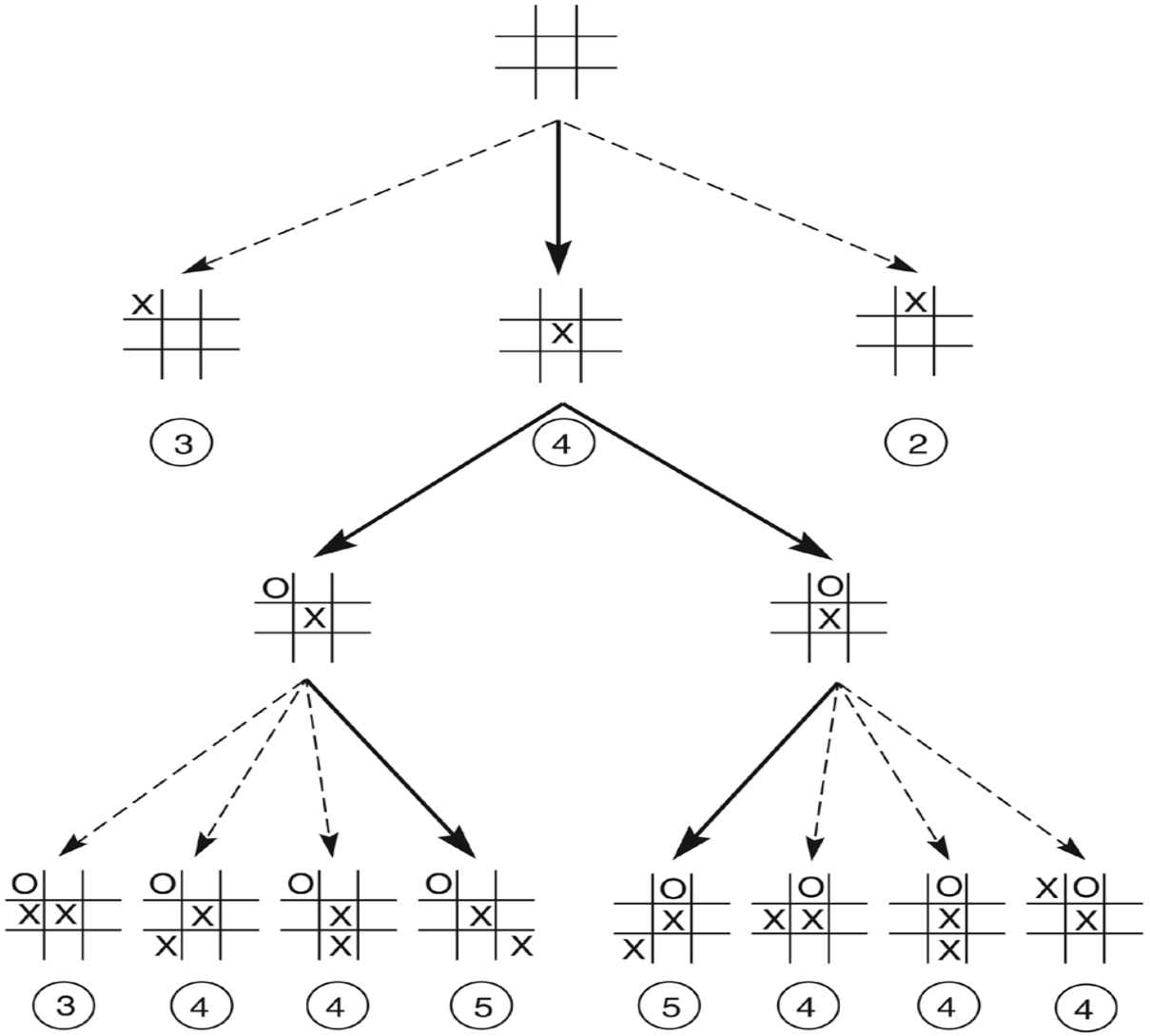

المعيدي

Implementing Heuristic Function for 8-Puzzle

EXAMPLE

Which of the following (B, C, D) is the best choice for you?

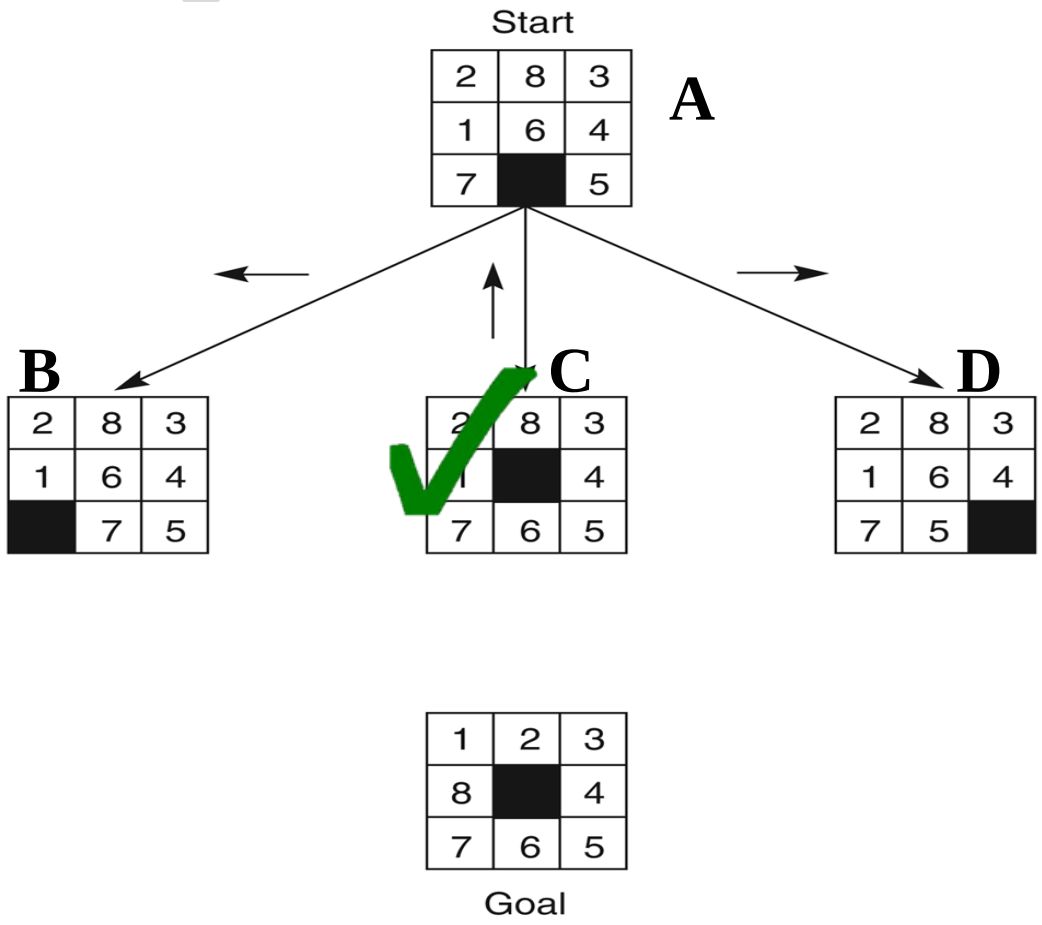

حسن المعيدي

Implementing Heuristic Function for 8-Puzzle

There are two ways to implement the heuristic function for the 8-puzzle game:

1. $h_1(n)$ = Count number of tiles out of places when comparing the state with goal state.

2. $h_2(n)$ = Sum all distances by which tiles out of places. This is called <u>Manhattan Distance</u>.

د. حسن المعيدي

Implementing Heuristic Function for 8-Puzzle

State	$h_1(n)$ = Tiles out of place	$h_2(n)$ = Sum of distances out of places
B		
C 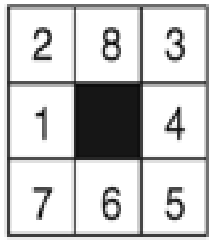		
D		

1	2	3
8		4
7	6	5

Goal

د. حسن المعيدي

Implementing Heuristic Function for 8-Puzzle

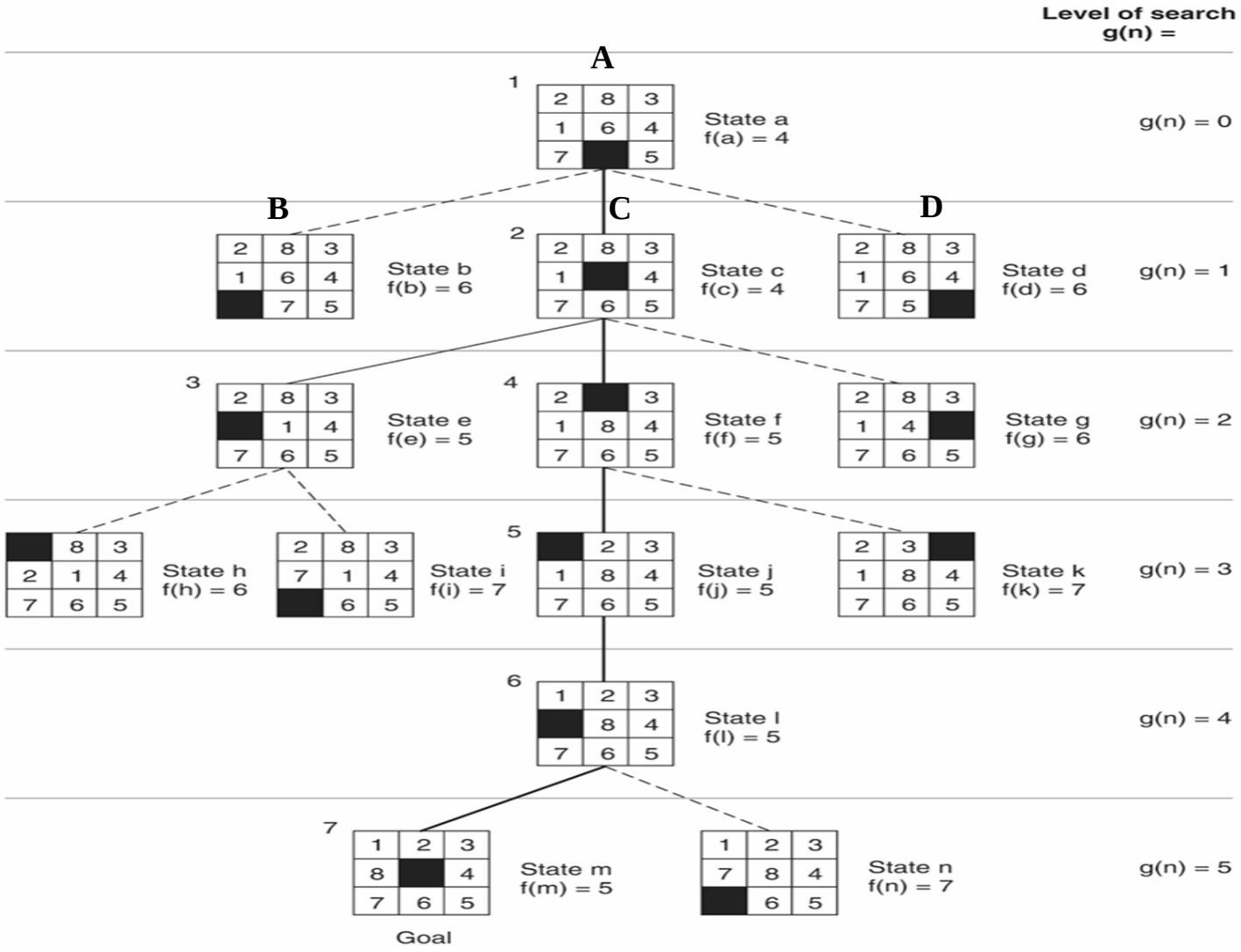

Greedy Best-First Search (GBFS)

Greedy Best-First Search (GBFS) Algorithm

```
function best_first_search;

begin
   open := [Start];                                                    % initialize
   closed := [ ];
   while open ≠ [ ] do                                                 % states remain
      begin
         remove the leftmost state from open, call it X;
         if X = goal then return the path from Start to X
         else begin
                  generate children of X;
                  for each child of X do
                  case
                        the child is not on open or closed:
                           begin
                                 assign the child a heuristic value;
                                 add the child to open
                           end;
                        the child is already on open:
                           if the child was reached by a shorter path
                           then give the state on open the shorter path
                        the child is already on closed:
                           if the child was reached by a shorter path then
                              begin
                                 remove the state from closed;
                                 add the child to open
                              end;
                  end;                                                 % case
                  put X on closed;
                  re-order states on open by heuristic merit (best leftmost)
               end;
return FAIL                                                            % open is empty
end.
```

Greedy Best-First Search (GBFS)

EXAMPLE

Apply the **GBFS** algorithm for the following graph. Arcs are labeled with the value of a cost function. Inside each node is the value of a heuristic function; the number gives the estimate of the distance to the goal.

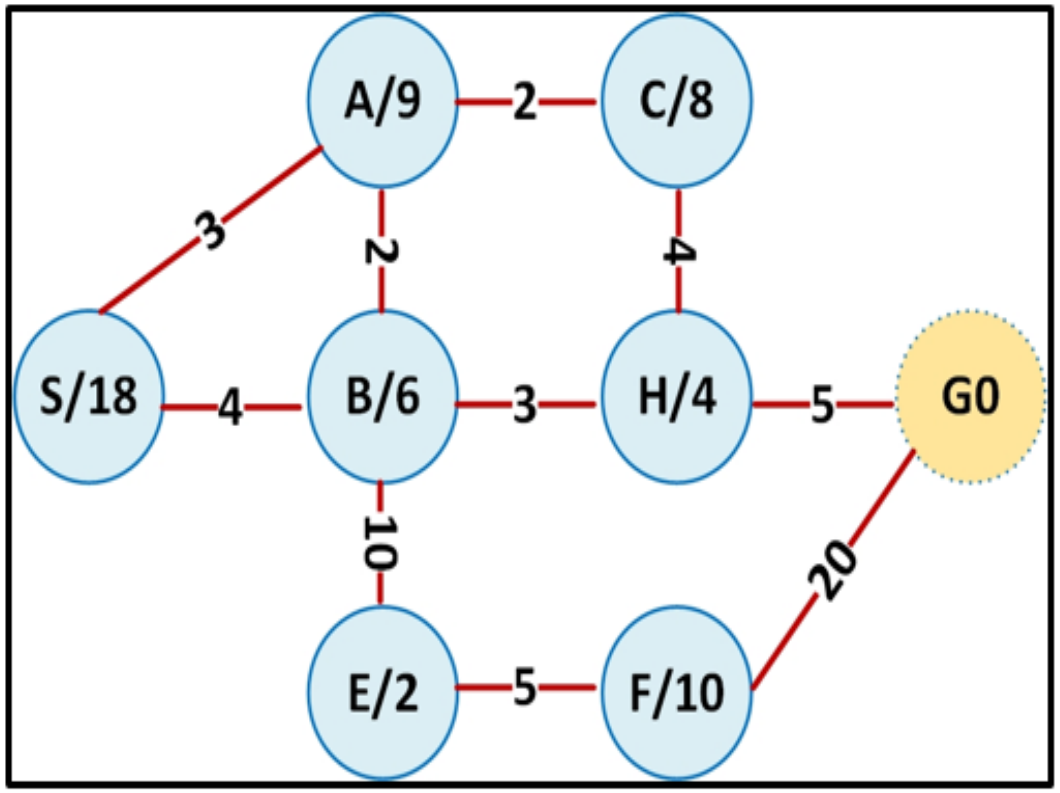

Greedy Best-First Search (GBFS)

i	[OPEN]	X
1		
2		
3		
4		
5		

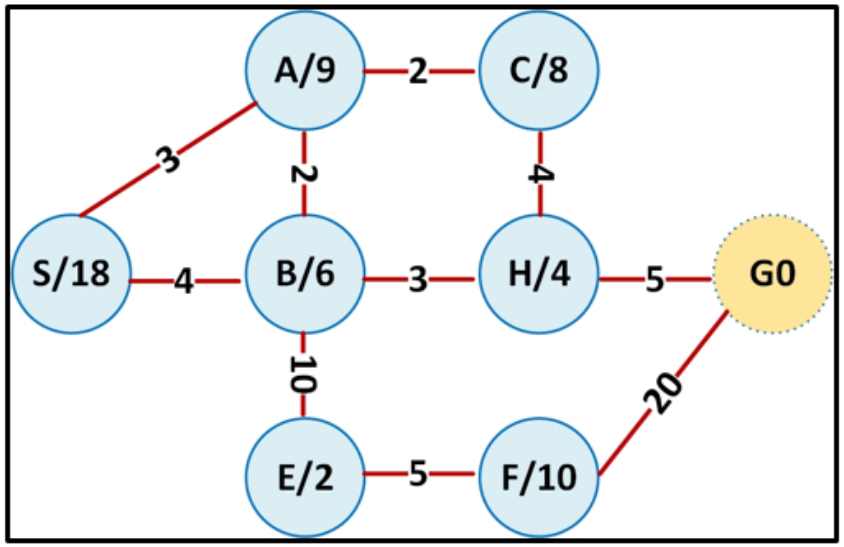

د. حسن المعيدي

Greedy Best-First Search (GBFS)

1- What is the content of OPEN array at iteration 3?

2- What is the value of (x) at iteration 3?

3- What is the content of OPEN array at iteration 5?

4- What is the value of (x) at iteration 5?

5- What is the order of the expanded states?

6- What is the solution path?

د. حسن المعيدي

Greedy Best-First Search (GBFS)

7- What is the first item of OPEN array at iteration 3?

8- What is the heuristic value of the third item of OPEN array at iteration 3?

9- What is the heuristic value of the goal state?

10- If the heuristic value of an initial state (S) is zero, what can you say about (S)?

د. حسن المعيدي

Greedy Best-First Search (GBFS)

EXAMPLE

Apply the GBFS algorithm for the following graph.

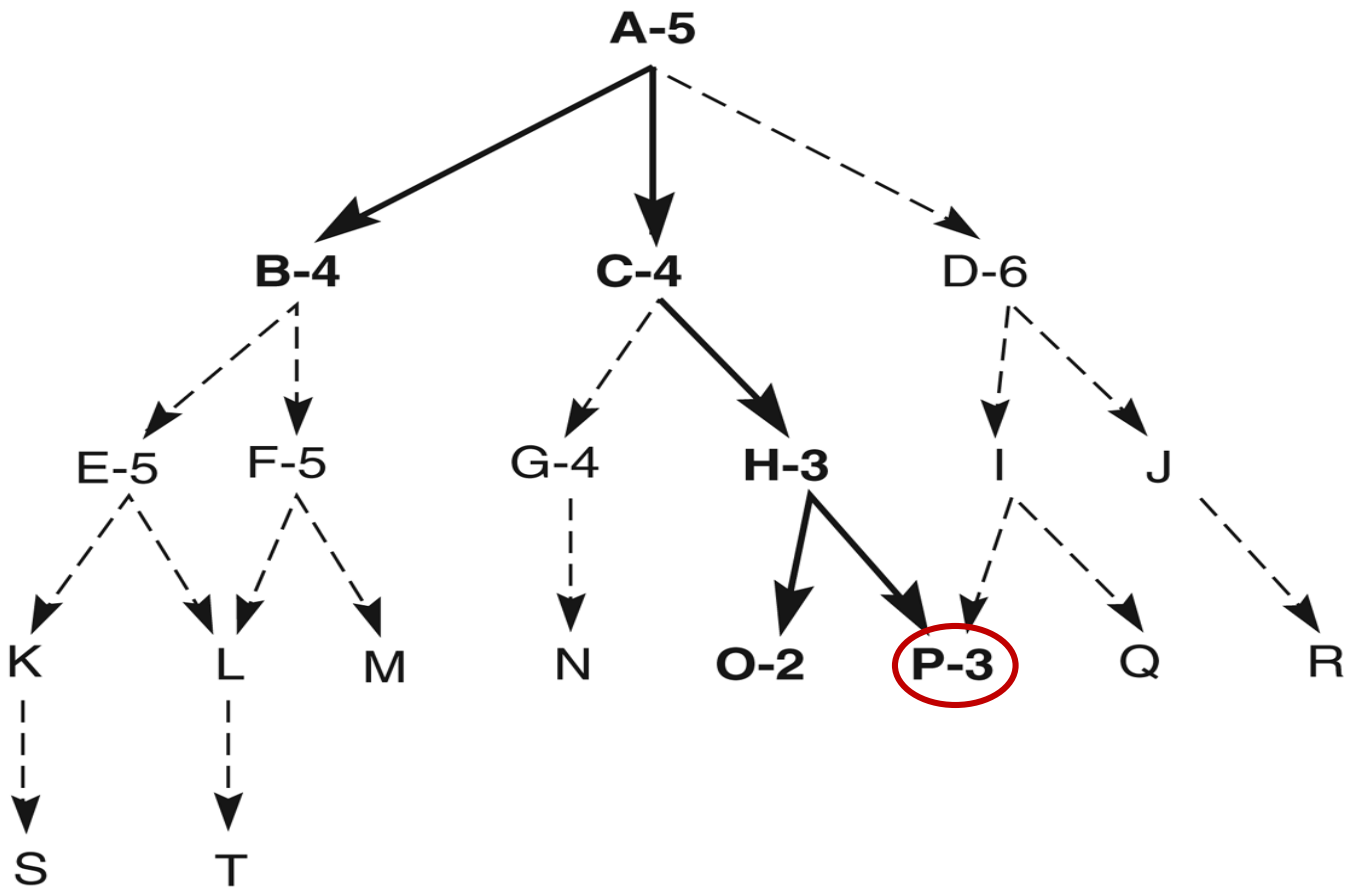

Greedy Best-First Search (GBFS)

i	[OPEN]	X
1		
2		
3		
4		
5		
6		
7		
8		
9		
10		
11		

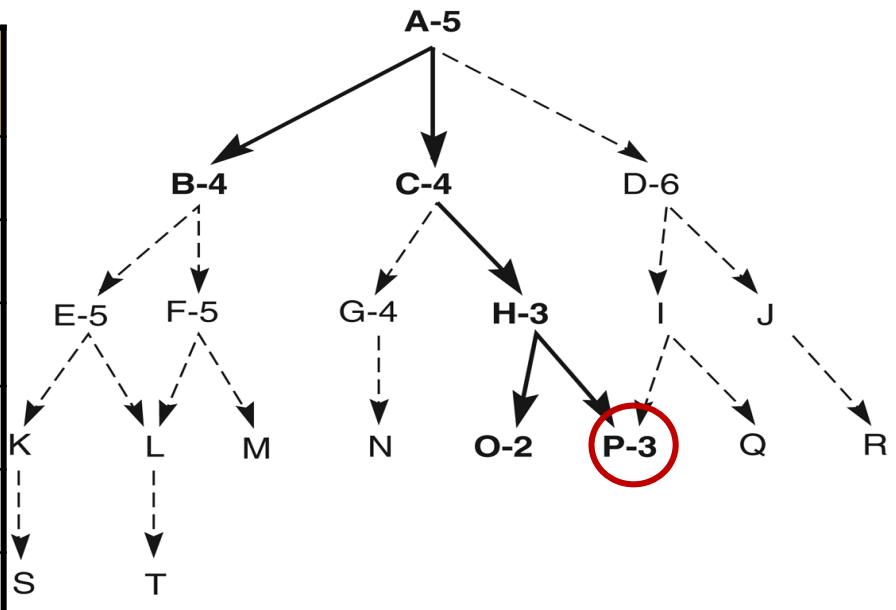

حسن المعيدي

Evaluating the Greedy Best-First Search (GBFS)

Completeness

Is the strategy guaranteed to find a solution when there is one?

Optimality

Does the strategy find the highest-quality solution when there are several solutions?

د. حسن المعيدي

Evaluating the Greedy Best-First Search (GBFS)

Time Complexity How long does it take to find a solution?

Space Complexity How much memory does it need to perform the search?

د. حسن المعيدي

Greedy Best-First Search (GBFS)

Consider the following 8-puzzle game, with start and goal states shown. Apply the GBFS algorithm assuming that we prefer to move the blank first left, then up, then right, and then down. Assume further we do not generate any duplicate states (i.e., states that **already expanded).** **Use the number of tiles that are out of places (included the blank tile) as a heuristic function.**

2	8	3
1	6	4
7		5

initial

1	2	3
8		4
7	6	5

goal

Java Application http://www.aiai.ed.ac.uk/~gwickler/eightpuzzle-uninf.html

GBFS SOLUTION 8-Puzzle

A/5

2	8	3
1	6	4
7		5

1	2	3
8		4
7	6	5

goal

i	[OPEN]	X
1		

د. حسن المعيدي

GBFS SOLUTION 8-Puzzle

A/5

2	8	3
1	6	4
7		5

1	2	3
8		4
7	6	5

goal

i	[OPEN]	X
1		
2		

د. حسن المعيدي

GBFS SOLUTION 8-Puzzle

C/4

2	8	3
1		4
7	6	5

A

1	2	3
8		4
7	6	5

goal

i	[OPEN]	X
1		
2		
3		

Continue

Tower of Hanoi Game

There are n disks $D_1, D_2, \ldots, D_n$ with size increasing with n and three pegs 1,2,3.

Initially all disks are stacked on peg_1, with D_1, the smallest on top and D_n, the largest, at the bottom.

The problem is to transfer the stack to peg_3 given that only one disk can be moved at a time and that no disk may be placed on top of a smaller one.

د. حسن المعيدي

QUIZ

Apply the GBFS algorithm for the tower of Hanoi game.

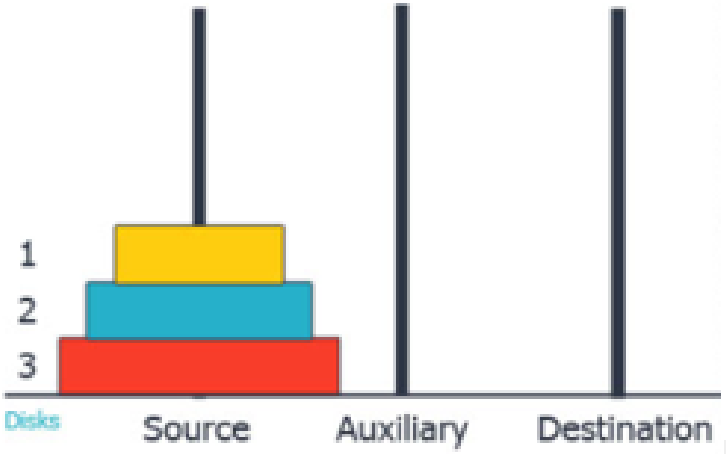

initial

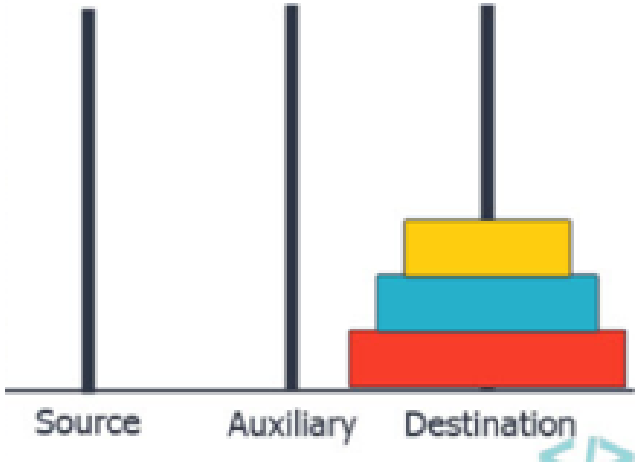

goal

د. حسن المعيدي

GBFS SOLUTION Tower of Hanoi

i	[OPEN]	X
1		
2		
3		
4		
5		
6		
7		
8		
9		
10		
11		

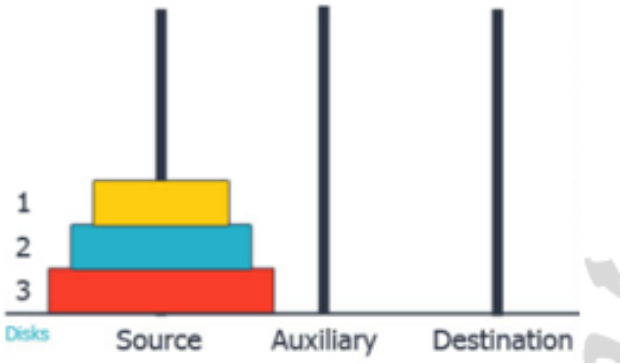

initial

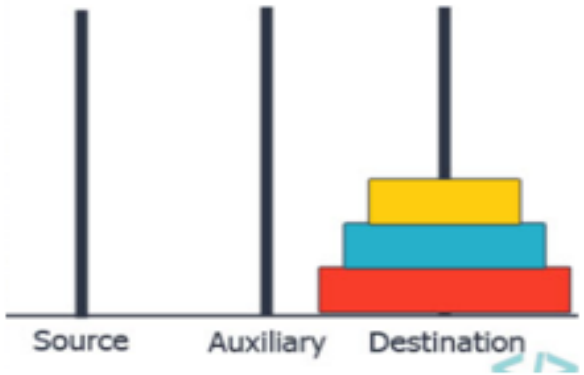

goal

د. حسن المعيدي

د. حسن المعيدي

A* Search Algorithm

A* Algorithm

- A* Algorithm is one of the best and popular techniques used for path finding and graph traversals.
- A lot of games and web-based maps use this algorithm for finding the shortest path efficiently.
- A* Algorithm is a variant of the best-first search algorithm.
- A* is based on using heuristic methods to achieve **optimality** and **completeness**.

د. حسن المعيدي

A* Algorithm

$$f(n) = g(n) + h(n)$$

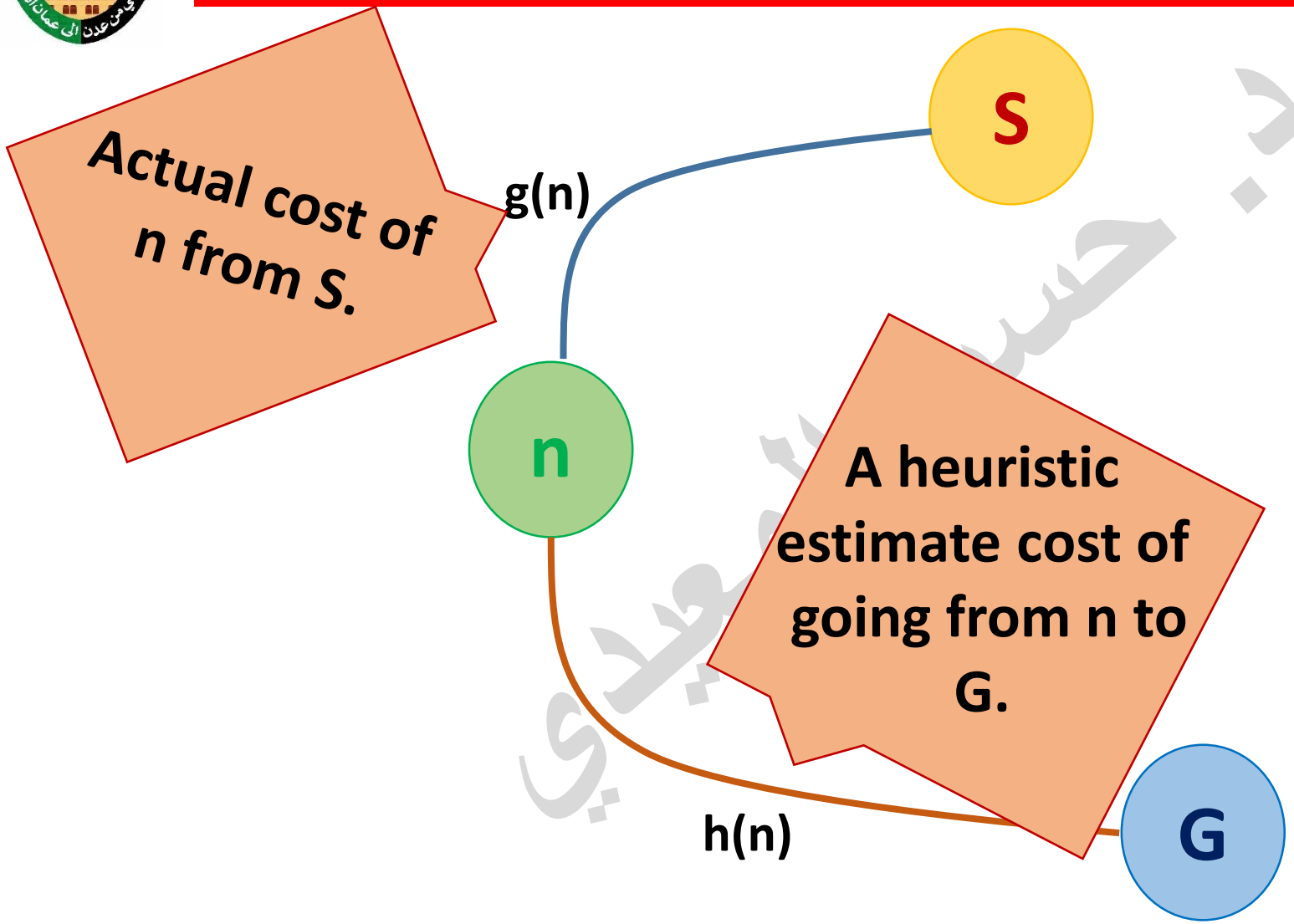

د. حسن المعيدي

A*Algorithm

1. Search queue Q is empty.
2. Place the start state **s** in Q with f value h(s).
3. If Q is empty, return failure.
4. Take node n from Q with lowest f value.
   (Keep Q sorted by f values and pick the first element).
5. If n is a goal node, stop and return solution.
6. Generate successors of node n.
7. For each successor n' of n do:
   a) Compute f(n') = g(n') + h(n').
   b) If n' is new (never generated before), add n' to Q.
   c) If node n' is already in Q with a higher f value, replace it with current f(n') and place it in sorted order in Q.
   End for
8. Go back to step 3.

A*Algorithm

EXAMPLE

Apply the **A*** algorithm for the following graph. Arcs are labeled with the value of a cost function. Inside each node is the value of a heuristic function; the number gives the estimate of the distance to the goal.

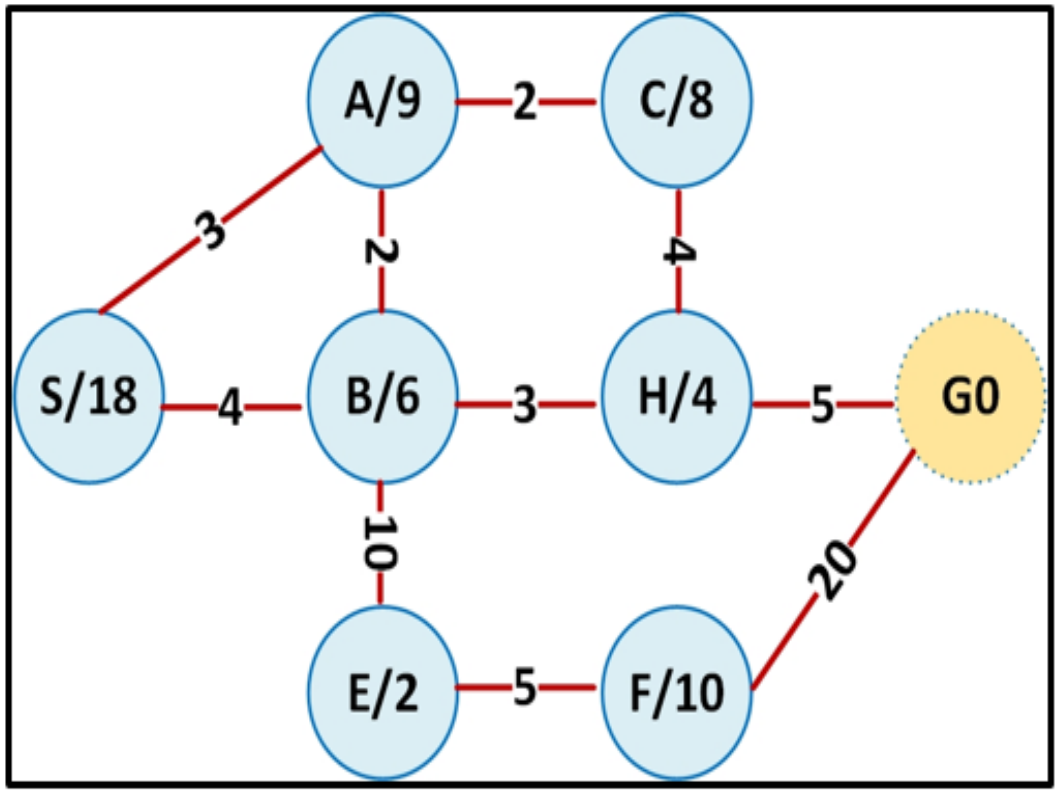

A* Algorithm

SOLUTION

Example

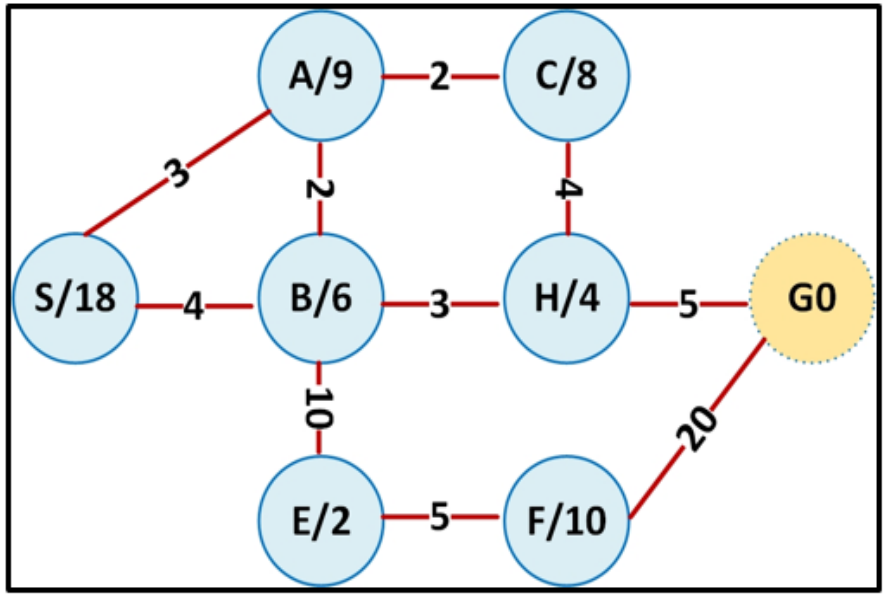

i	[OPEN]	X
1		

د. حسن المعيدي

A* Algorithm

SOLUTION

Example

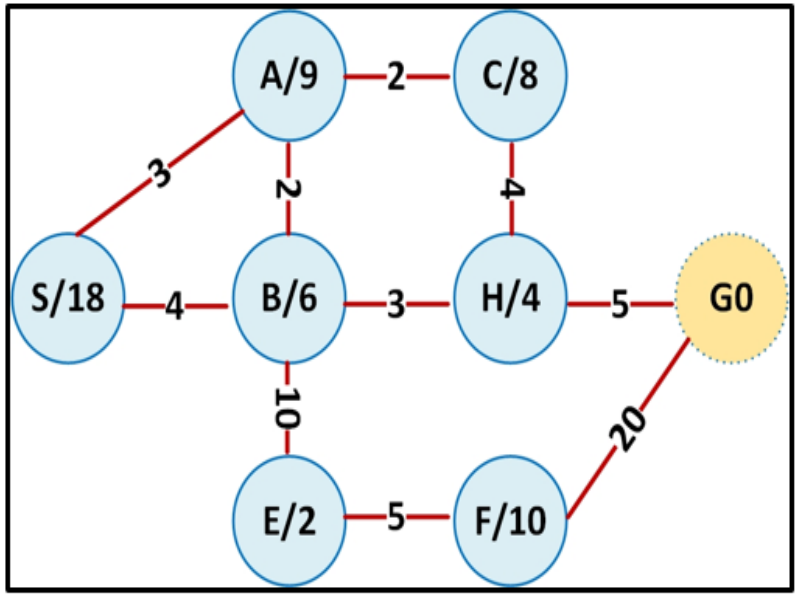

i	[OPEN]	X
1		
2		

د. حسن المعيدي

A* Algorithm

SOLUTION

Example

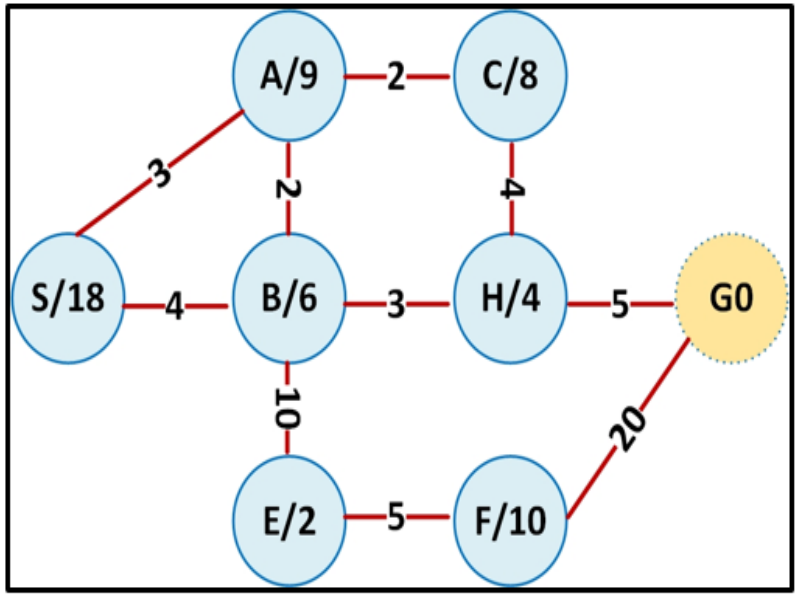

i	[OPEN]	X
1		
2		
3		

د. حسن المعيدي

A* Algorithm

SOLUTION

Example

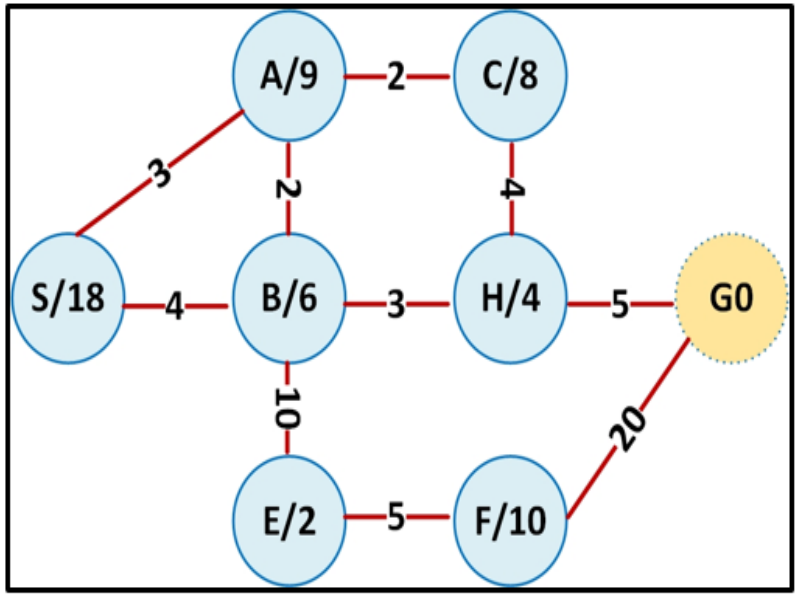

i	[OPEN]	X
3		
4		

د. حسن المعيدي

A* Algorithm

SOLUTION

Example

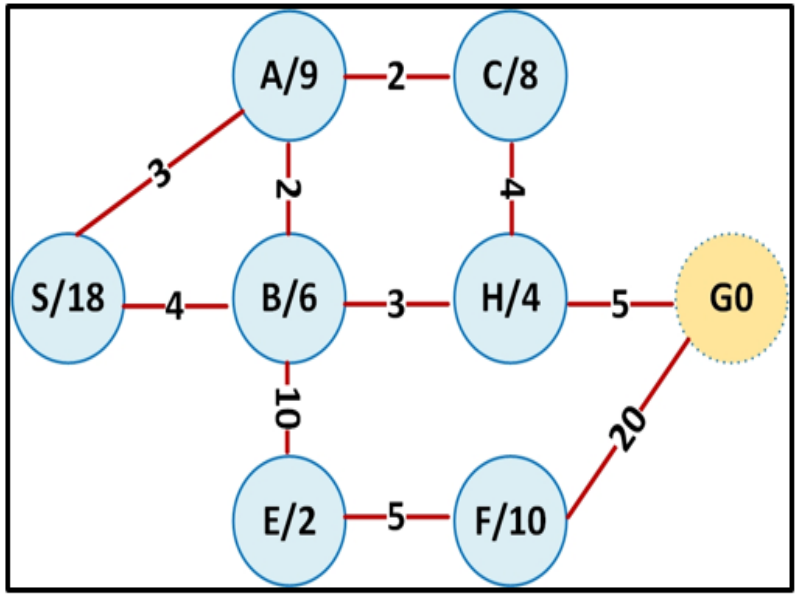

i	[OPEN]	X
4		
5		

د. حسن المعيدي

A* Algorithm

SOLUTION

Example

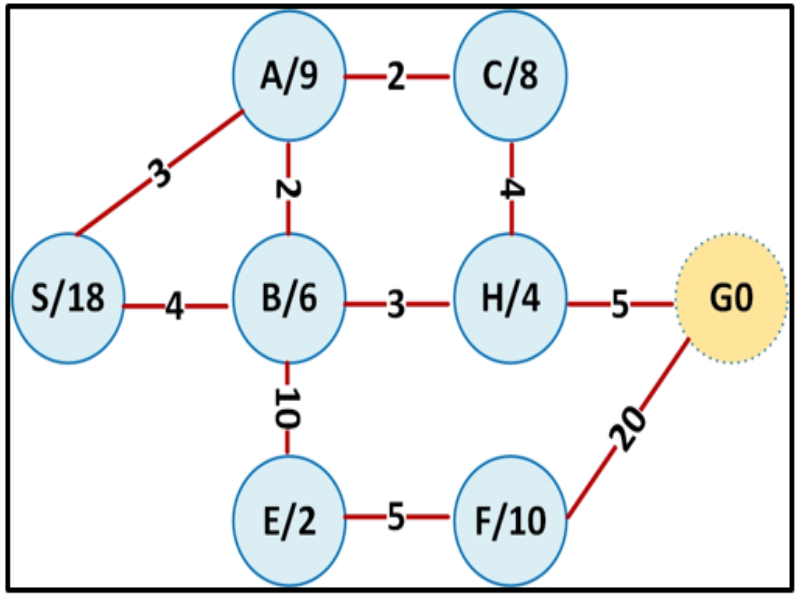

i	[OPEN]	X
5		
6		

د. حسن المعيدي

A* Algorithm

SOLUTION

Example

i	[OPEN]	X
1		
2		
3		
4		
5		
6		

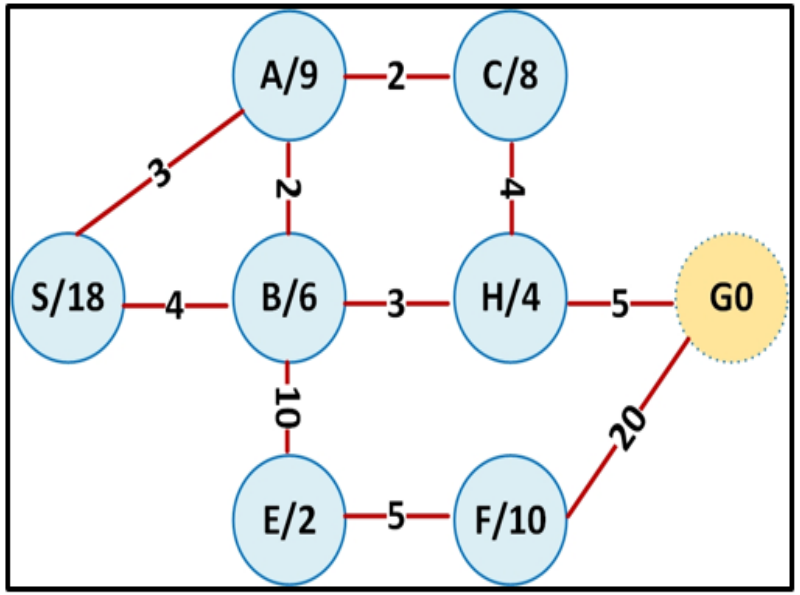

Expanded States:

Solution Path:

د. حسن المعيدي

A*Algorithm

QUIZ

1

Suppose we want to use the A* algorithm on the graph below to find the shortest path from node S to node G. Each node is labeled by a capital letter and the value of a heuristic function. Each edge is labeled by the cost to traverse that edge.

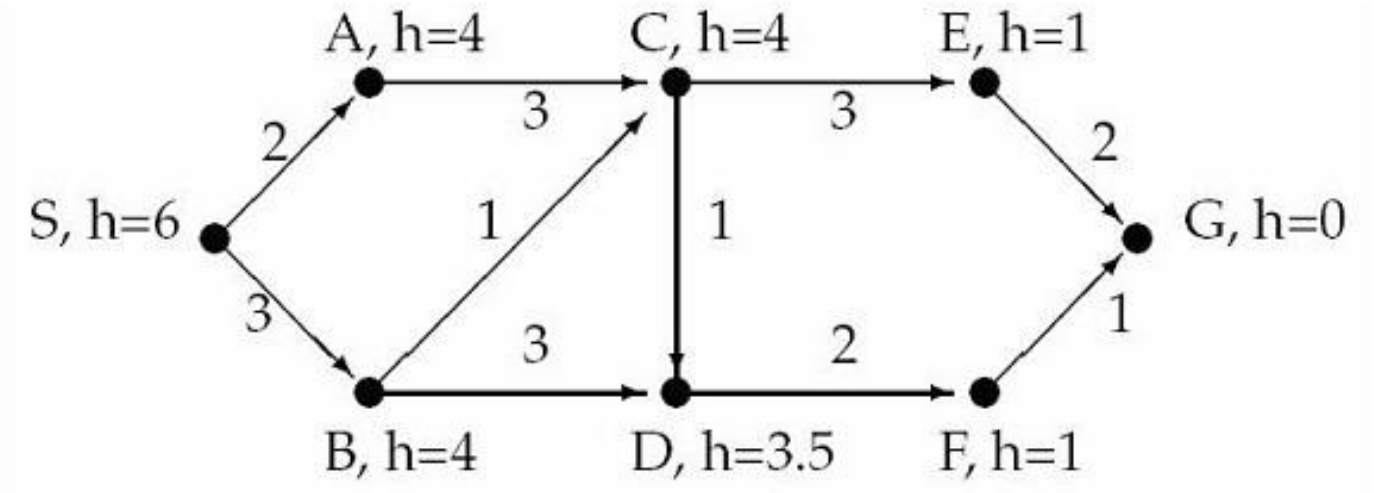

A* Algorithm

SOLUTION

Quiz 1

i	[OPEN]	X
1		
2		
3		
4		
5		
6		
7		
8		
9		
10		
11		

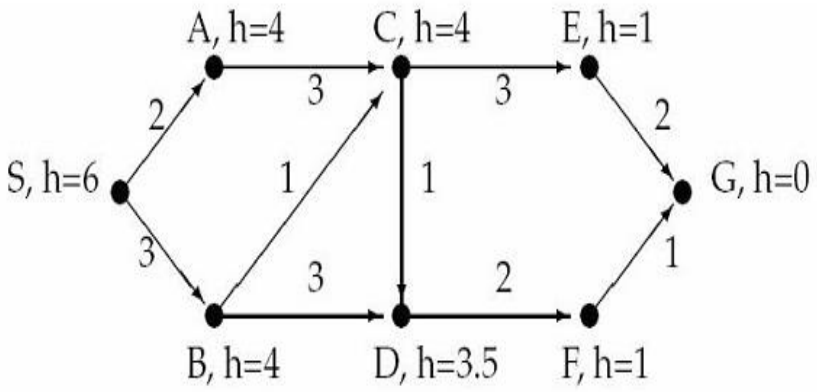

د. حسن المعيدي

A*Algorithm

QUIZ

2

Apply the A* algorithm for the following graph; assuming the initial state is (A) and goal state is (J).

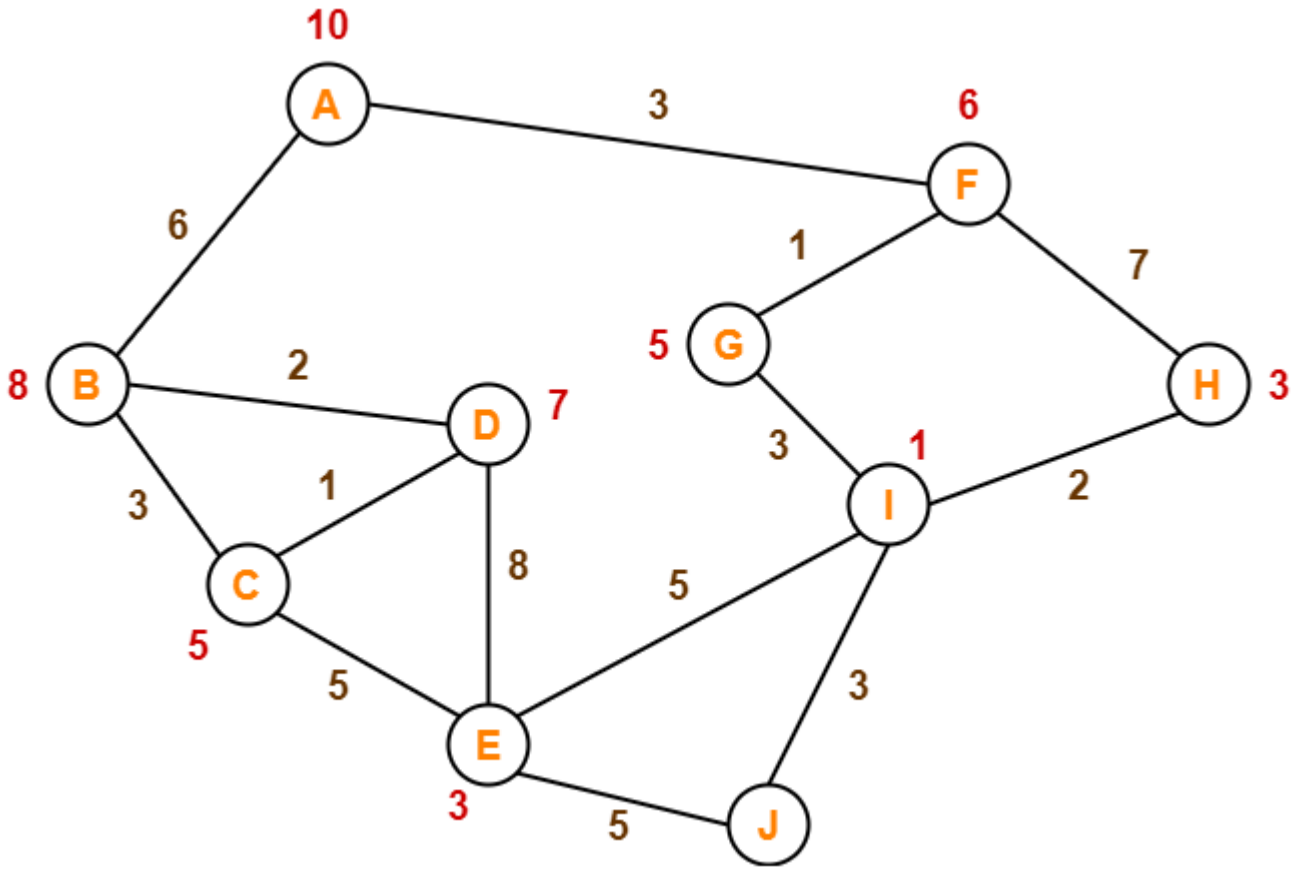

- **The numbers written on edges represent the distance between the nodes.**
- **The numbers written on nodes represent the heuristic value.**

A* Algorithm

SOLUTION

Quiz 2

i	[OPEN]	X
1		
2		
3		
4		
5		
6		
7		
8		
9		
10		
11		

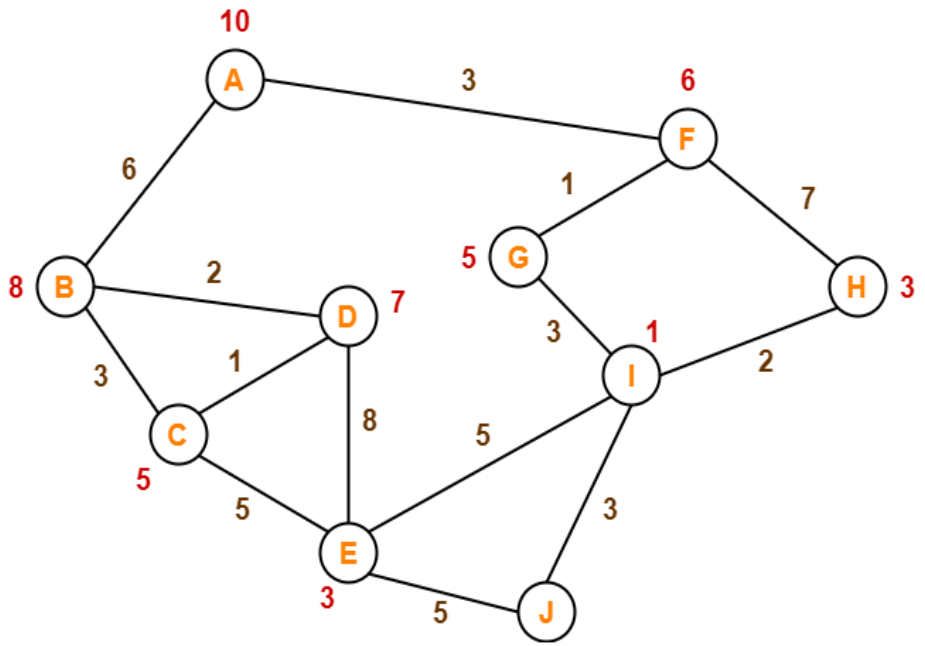

د. حسن المعيدي

Evaluating A* Algorithm

Completeness

Is the strategy guaranteed to find a solution when there is one?

Optimality

Does the strategy find the highest-quality solution when there are several solutions?

د. حسن المعيدي

Evaluating A* Algorithm

Time Complexity How long does it take to find a solution?

Space Complexity How much memory does it need to perform the search?

د. حسن المعيدي

Hill Climbing

Search Algorithm

Hill Climbing Algorithm

Hill Climbing Algorithm

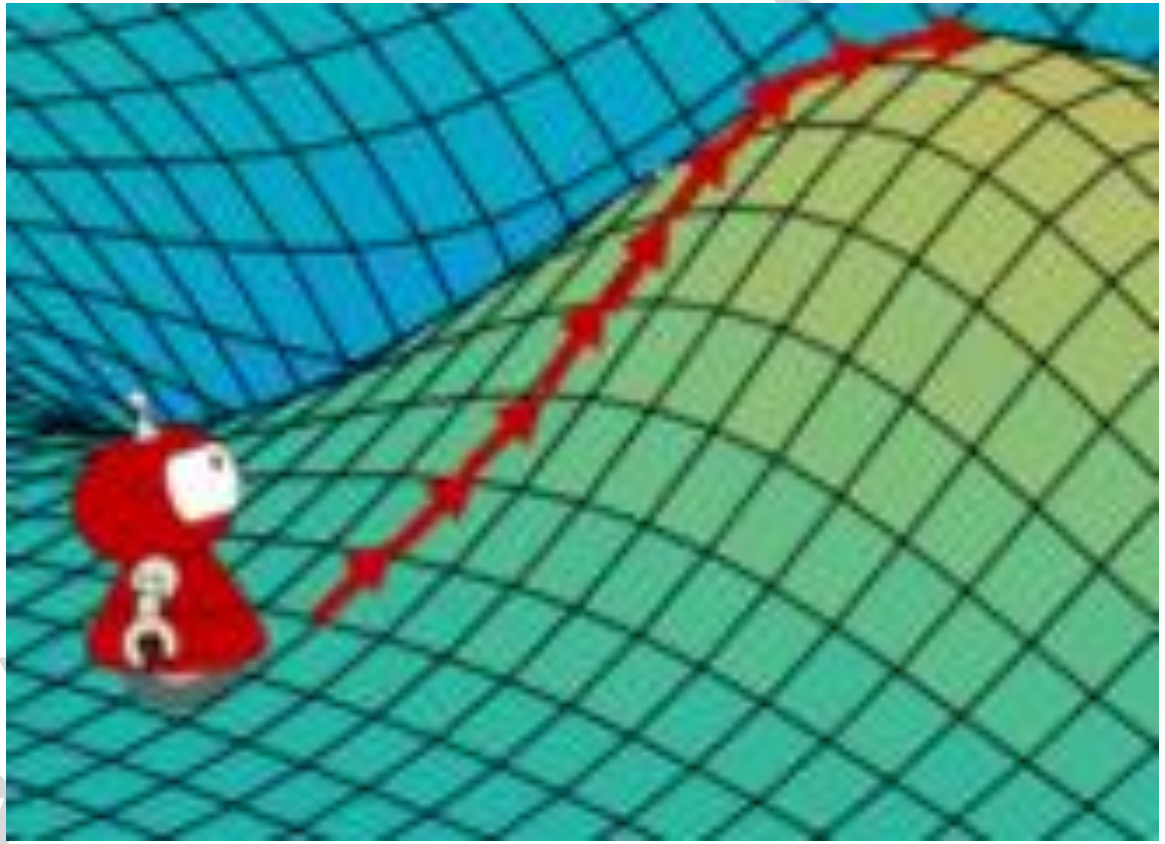

Hill Climbing Algorithm

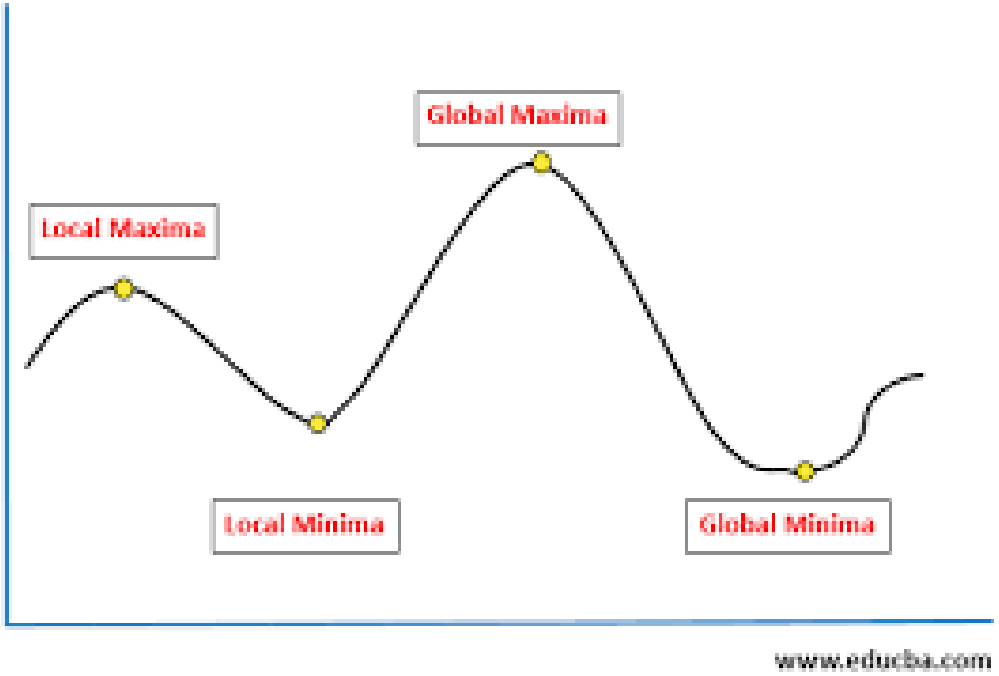

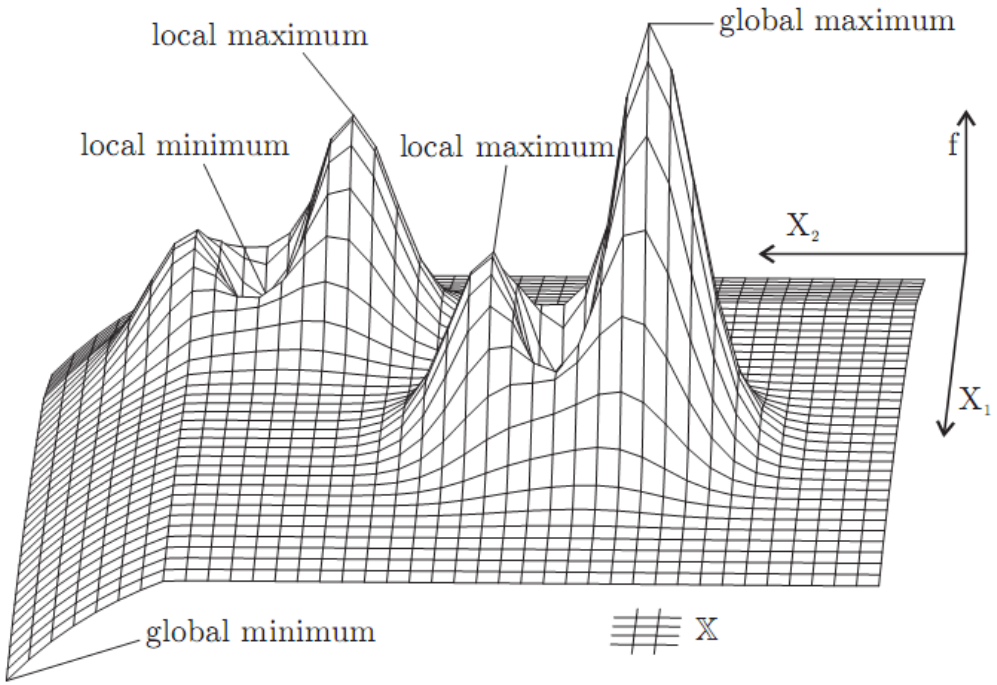

Hill Climbing Algorithm

- Hill climbing is a technique that uses mathematical approach for optimization purpose. It belongs to the category of **local search algorithms.**

- At every state you choose the state leads you closer to the goal (according to the heuristic estimate), and continue from there.

- The name “Hill Climbing” comes from the idea that you are trying to find the top of a hill, and you go in the direction that is up from wherever you are.

د. حسن المعيدي

Hill Climbing Algorithm

1. Pick a random point in the search space.
2. Consider all the neighbors of the current state.
3. Choose the neighbor with the best quality and move to that step.
4. Repeat step2 until all the neighboring states are of lower quality.
5. Return the current state as a solution state.

د. حسن المعيدي

Hill Climbing Algorithm

EXAMPLE

Apply the **Hill Climbing** algorithm for the following graph. Arcs are labeled with the value of a cost function. Inside each node is the value of a heuristic function; the number gives the estimate of the distance to the goal.

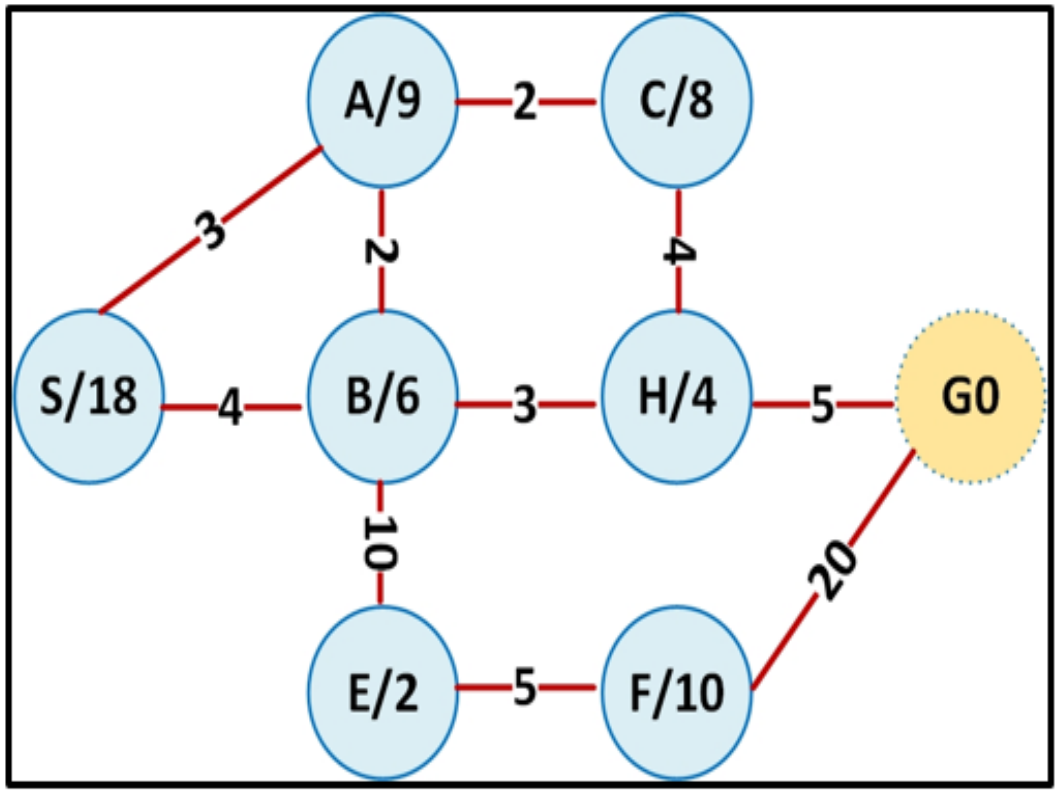

Hill Climbing

SOLUTION

Example

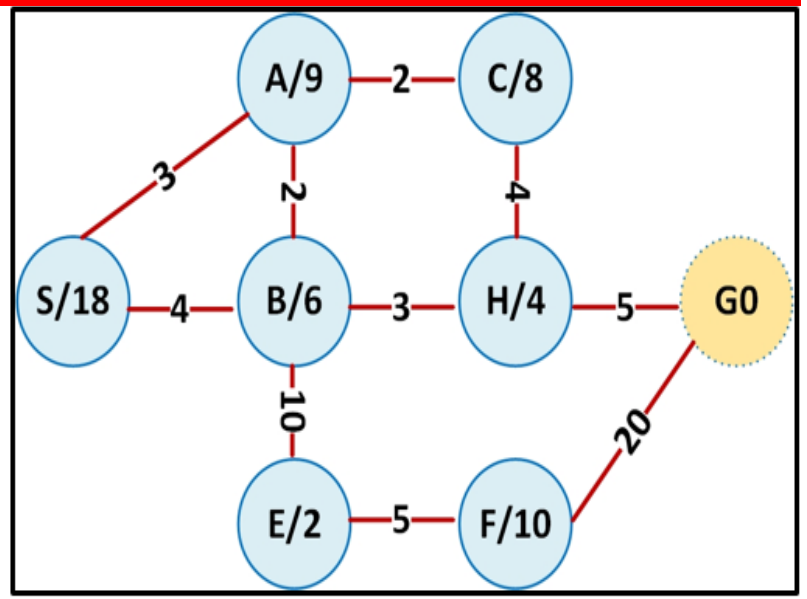

i	[OPEN]	X
1		
2		
3		
4		
5		

د. حسن المعيدي

Hill Climbing SOLUTION Example

1- What is the content of OPEN array at iteration 3?

2- What is the value of (x) at iteration 3?

3- What is the content of OPEN array at iteration 5?

4- What is the value of (x) at iteration 5?

5- What is the order of the expanded states?

6- What is the solution path?

د. حسن المعيدي

Challenges in Hill Climbing Algorithm

Local Maxima: It is a state that is better than all of its neighbors, but not better than some other states.

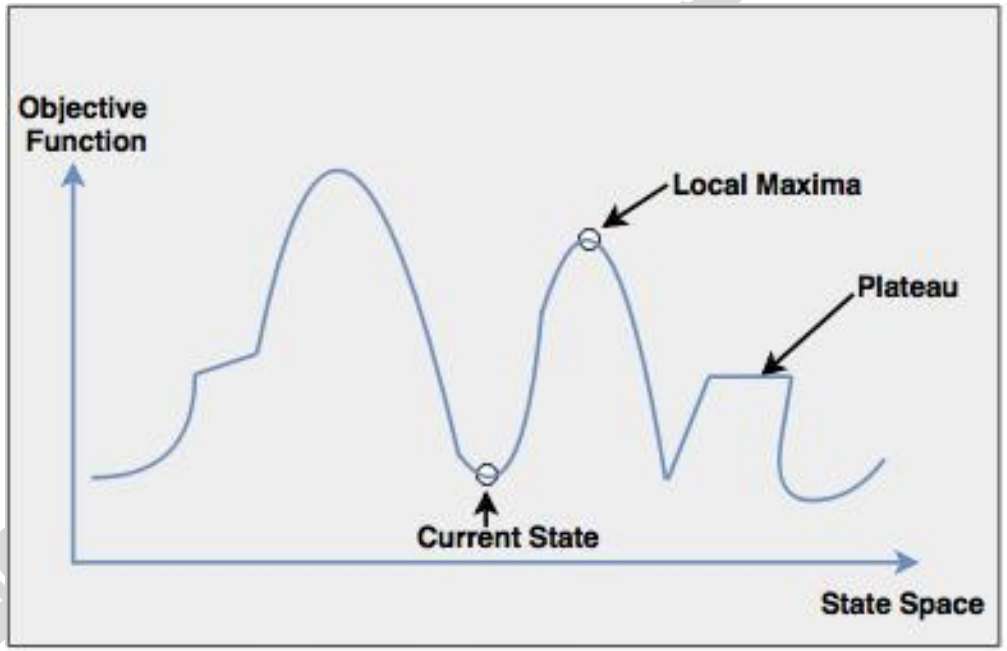

Fig: Hill Climbing : Local Search

A Plateau: Is a flat area of the search space in which a number of states have the same best value, on plateau its not possible to determine the best direction in which to move.

Hill Climbing

QUIZ

1

Apply the Hill Climbing algorithm for the following graph; assuming the initial state is (A) and goal state is (J).

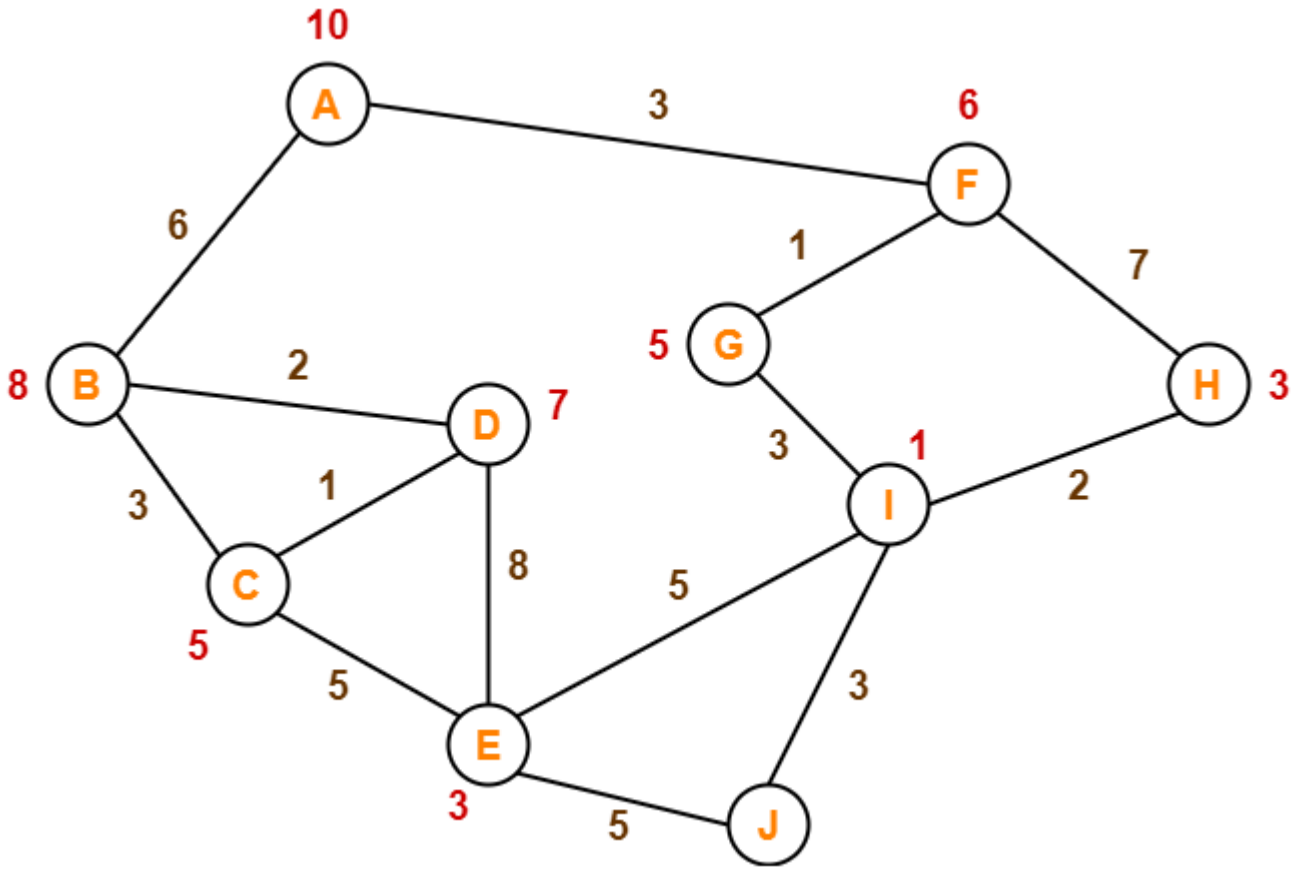

- **The numbers written on edges represent the distance between the nodes.**
- **The numbers written on nodes represent the heuristic value.**

Hill Climbing SOLUTION Quiz 1

i	[OPEN]	X
1		
2		
3		
4		
5		
6		
7		
8		
9		
10		
11		

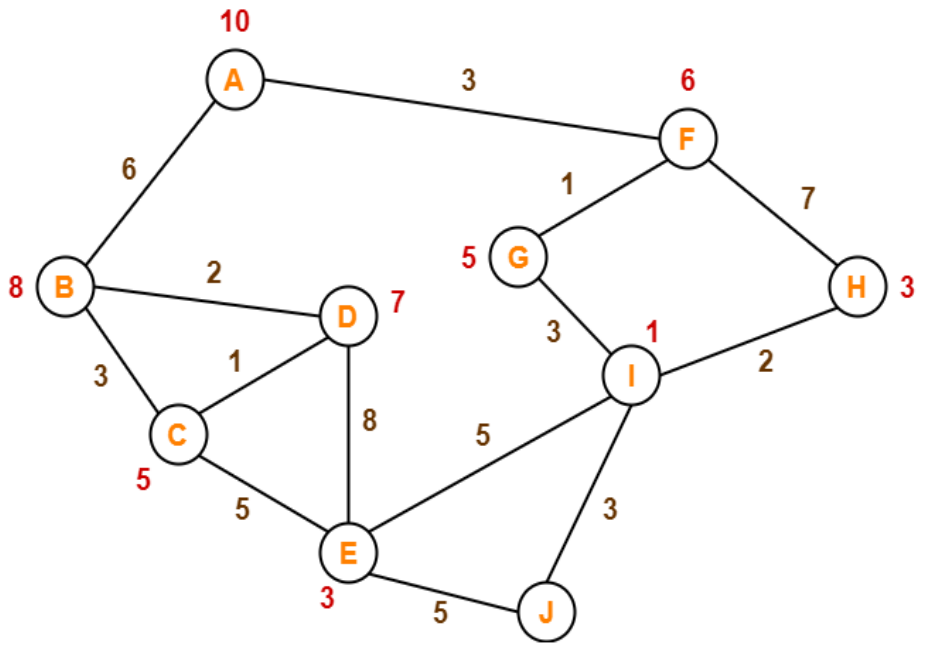

د. حسن المعيدي

Check - Chapter Learning Outcomes

CLO

6

- Know and understand the meaning of heuristic search.
- List some heuristic search algorithms.
- Implementing heuristic function for tic-tac-toe
- Implementing heuristic function for 8-puzzle
- Understand, apply and evaluate (GBFS, A*, and Hill Climbing) algorithms

د. حسن المعيدي

End of Chapter

6